INDEXABLE

Port**Tools** (metric)

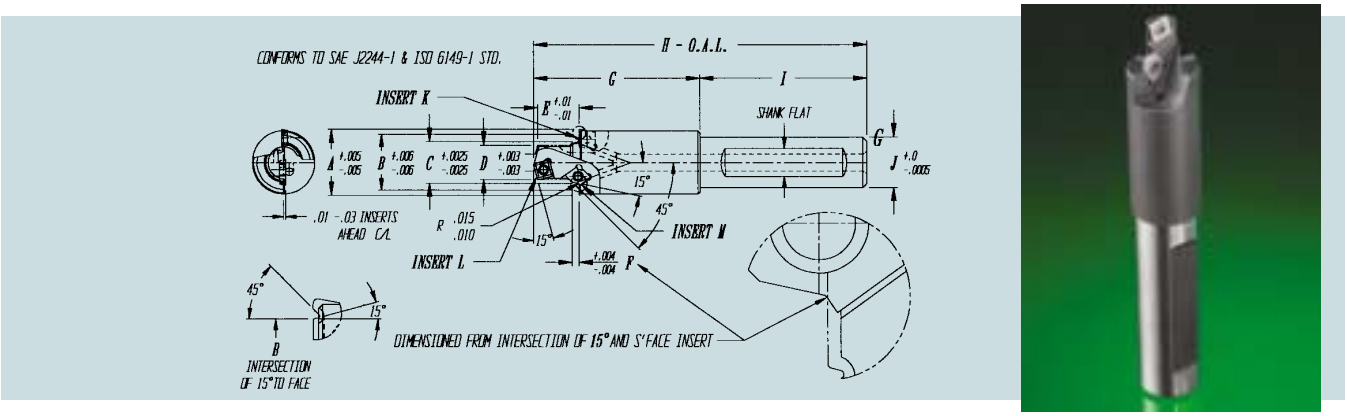

THE PRECISION AND REPEATABILITY OF TOOL FAB'S INDEXABLE PORT TOOLS ARE ALSO AVAILABLE IN METRIC SIZES!

- Conforms to ISO 6149-1 and SAE J2244/1 Specs.

TOOL NO.	THREAD SIZE	A DIAMETER	B DIAMETER	C DIAMETER	D DIAMETER	E LENGTH	15°	F LENGTH	G LENGTH	H LENGTH	I LENGTH	J DIAMETER
TF 07690	M 14x1.5	.984 (25)	.834 (21.2)	.6245 (15.86)	.493 (12.52)	.555 (14.1)	15°	.102 (2.59)	2-1/2"	5"	2-1/2"	.7499
TF 07691	M 16x1.5	1.102 (28)	.952 (24.2)	.7033 (17.86)	.570 (14.48)	.555 (14.1)	15°	.102 (2.59)	2 1/2"	5"	2 1/2"	.7499
TF 07692	M 18x1.5	1.181 (30)	1.031 (26.2)	.7820 (19.86)	.650 (16.51)	.675 (17.1)	15°	.102 (2.59)	2 1/2"	5"	2 1/2"	.7499
TF 07693	M 20x1.5	1.220 (31)	1.070 (27.2)	.8608 (21.86)	.730 (18.54)	.710 (18.1)	15°	.102 (2.59)	2 1/2"	5"	2 1/2"	.7499
TF 07694	M 22x1.5	1.378 (35)	1.150 (29.2)	.9395 (23.86)	.805 (20.44)	.750 (19.1)	15°	.102 (2.59)	2 1/2"	5"	2 1/2"	.7499
TF 07695	M 27x2.0	1.575 (40)	1.347 (34.2)	1.1600 (29.46)	.985 (25.02)	.870 (22.1)	15°	.130 (3.30)	3"	6"	3"	.9999
TF 07696	M 30x2.0	1.732 (44)	1.505 (38.2)	1.2780 (32.46)	1.100 (27.94)	.870 (22.1)	15°	.130 (3.30)	3"	6"	3"	.9999
TF 07697	M 33x2.0	1.929 (49)	1.701 (43.2)	1.3962 (35.46)	1.220 (30.98)	.870 (22.1)	15°	.130 (3.30)	3"	6"	3"	.9999
TF 07698	M 42x2.0	2.401 (61)	2.055 (52.2)	1.7505 (44.46)	1.575 (40.01)	.900 (22.9)	15°	.130 (3.30)	3"	6"	3"	1.2499
TF 07699	M 48x2.0	2.599 (66)	2.253 (57.2	1.9867 (50.46)	1.810 (45.97)	.985 (25.0)	15°	.130 (3.30)	3"	6"	3"	1.2499
TF 07700	M 60x2.0	2.993 (76)	2.647 (67.2)	2.4592 (62.46)	2.285 (58.04)	1.100 (27.9)	15°	.130 (3.30)	3"	6"	3"	1.9999

TOOL NO.	THREAD SIZE	INSERT K	INSERT L	INSERT M	TORX SCREW	QT.	TORX SCREW	QT.	TORX WRENCH	TORX WRENCH
TF 07690	M 14x1.5	TF 07703	TF 04750	TF 07701	TF 04753	3	–		TF 04753 T-7	–
TF 07691	M 16x1.5	TF 07703	TF 04750	TF 07701	TF 04753	3	–		TF 04753 T-7	–
TF 07692	M 18x1.5	TF 07703	TF 04750	TF 07701	TF 04753	3	–		TF 04753 T-7	–
TF 07693	M 20x1.5	TF 07703	TF 04750	TF 07701	TF 04753	3	–		TF 04753 T-7	–
TF 07694	M 22x1.5	TF 07704	TF 04751	TF 07701	TF 04753	1	TF 04754	2	TF 04753 T-7	TF 04753 T-15
TF 07695	M 27x2.0	TF 07704	TF 04751	TF 07702	TF 04754	3	–		TF 04754 T-15	–
TF 07696	M 30x2.0	TF 07704	TF 04751	TF 07702	TF 04754	3	–		TF 04754 T-15	–
TF 07697	M 33x2.0	TF 07704	TF 04751	TF 07702	TF 04754	3	–		TF 0475W T-15	–
TF 07698	M 42x2.0	TF 07705	TF 04752	TF 07702	TF 04754	1	TF 04755	2	TF 04754 T-15	TF 04755 T-20
TF 07699	M 48x2.0	TF 07705	TF 04752	TF 07702	TF 04754	1	TF 04755	2	TF 04754 T-15	TF 04755 T-20
TF 07700	M 60x2.0	TF 07705	TF 04752	TF 07702	TF 04754	1	TF 04755	2	TF 0475W T-15	TF 04755 T-20

Note: All inserts are TiN-coated.